DE503 SERIES(Female Seal Lok O-Ring Face Seal Straight)

LIST

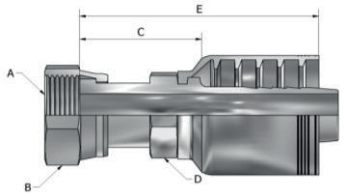

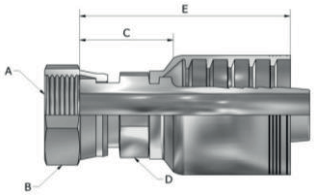

PART NUMBER	Products Description									
	Hose In-Dia	Thread UNF	Nut Hex		Tail-Growth		Nipple Hex		Overall length	
			MM	Inch	MM	Inch	MM	Inch	MM	Inch
		A	B		C		D		E	
DE503-23-16	1"	1-7/16-12	41.0	1.61	55.1	2.17	35.0	1.38	102.5	4.04
DE503-23-16S	1"	1-7/16-12	41.0	1.61	43.1	1.70	35.0	1.38	90.5	3.56
DE503-27-20	1-1/4	1-11/16-12	50.0	1.97	58.1	2.29	46.0	1.81	117.1	4.61
DE503-27-20S	1-1/4	1-11/16-12	50.0	1.97	46.6	1.83	46.0	1.81	105.6	4.16
DE503-32-24	1-1/2	2"-12	60.0	2.36	67.8	2.67	50.8	2.00	124.9	4.92
DE503-32-24S	1-1/2	2"-12	60.0	2.36	45.2	1.78	50.8	2.00	102.3	4.03

DE543 SERIES(Female Seal Lok O-Ring Face Seal 45˚ Elbow)

LIST

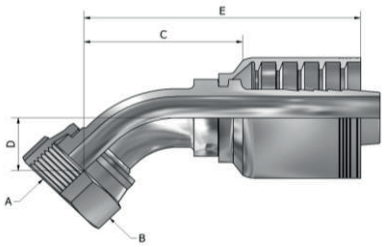

PART NUMBER	Products Description									
	Hose In-Dia	Thread UNF	Nut Hex		Tail-Growth		Drop		Overall length	
			MM	Inch	MM	Inch	MM	Inch	MM	Inch
		A	B		C		D		E	
DE543-23-16	1"	1-7/16-12	41.0	1.61	70.3	2.77	24.0	0.94	117.7	4.63
DE543-27-20	1-1/4	1-11/16-12	50.0	1.97	106.6	4.20	42.0	1.65	165.6	6.52
DE543-32-24	1-1/2	2"-12	60.0	2.36	121.8	4.80	48.0	1.89	178.9	7.04

DE593 SERIES(Female Seal Lok O-Ring Face Seal 90˚ Elbow)

LIST

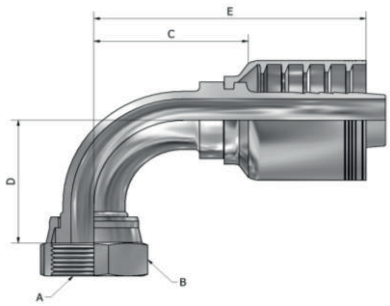

PART NUMBER	Products Description									
	Hose In-Dia	Thread UNF	Nut Hex		Tail-Growth		Drop		Overall length	
			MM	Inch	MM	Inch	MM	Inch	MM	Inch
		A	B		C		D		E	
DE593-23-16	1"	1-7/16-12	41.0	1.61	68.6	2.70	56.0	2.20	116.0	4.57
DE593-27-20	1-1/4	1-11/16-12	50	1.97	90.7	3.57	82.0	3.23	149.7	5.89
DE593-32-24	1-1/2	2"-12	60.0	2.36	106.0	4.17	101.0	3.98	163.1	6.42